BOSCO LIGHTING
LED LIGHTING SPECIALIST

1300 771 516
boscolighting.com.au

LED Downlight
BLDL-KW-54-SD30

Our high powered LED downlights will light up your retail displays, events and large reception areas creating the impact your clients really desire.

While really bright, they are also very energy efficient with over 80 lumens per watt in real world conditions! Better, Brighter and Less Power means longer lasting, brighter shops, receptions and events and lower electricity bills.

25, 110 Bourke Rd Alexandria NSW 2015 +612 8964 8485 info@boscolighting.com.au

1300 771 516
boscolighting.com.au

Product Specifications	
Power (W)	30
Luminous Flux (lm)	2550
Input Voltage (V)	AC 85-265
Connect	AU Standard Flex & Plug
CCT	Warm White, Neutral White, Cool White (3000K-6500K)
CRI	>80
Viewing Angle	120°
Dimming	Various dimming options available on request
IP Rating	54
Dimensions (mm)	Φ222
Cut Out (mm)	Φ200
Weight (kg)	1
Lifetime (hrs)	35000 @ L90 B10
Warranty (yrs)	3

Product Dimensions

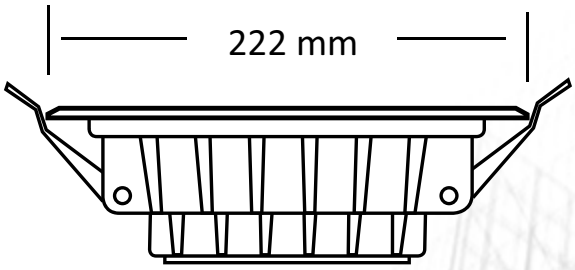

(Side View)

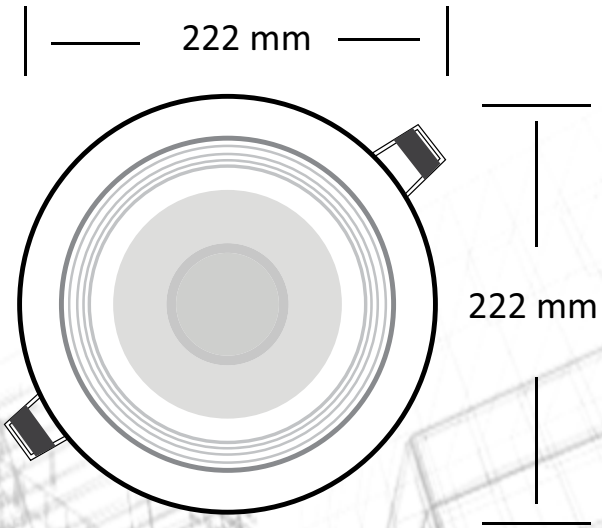

(Top View)